REV ROBOTICS

REV-21-2106

MAXPlanetary Universal Input Stage

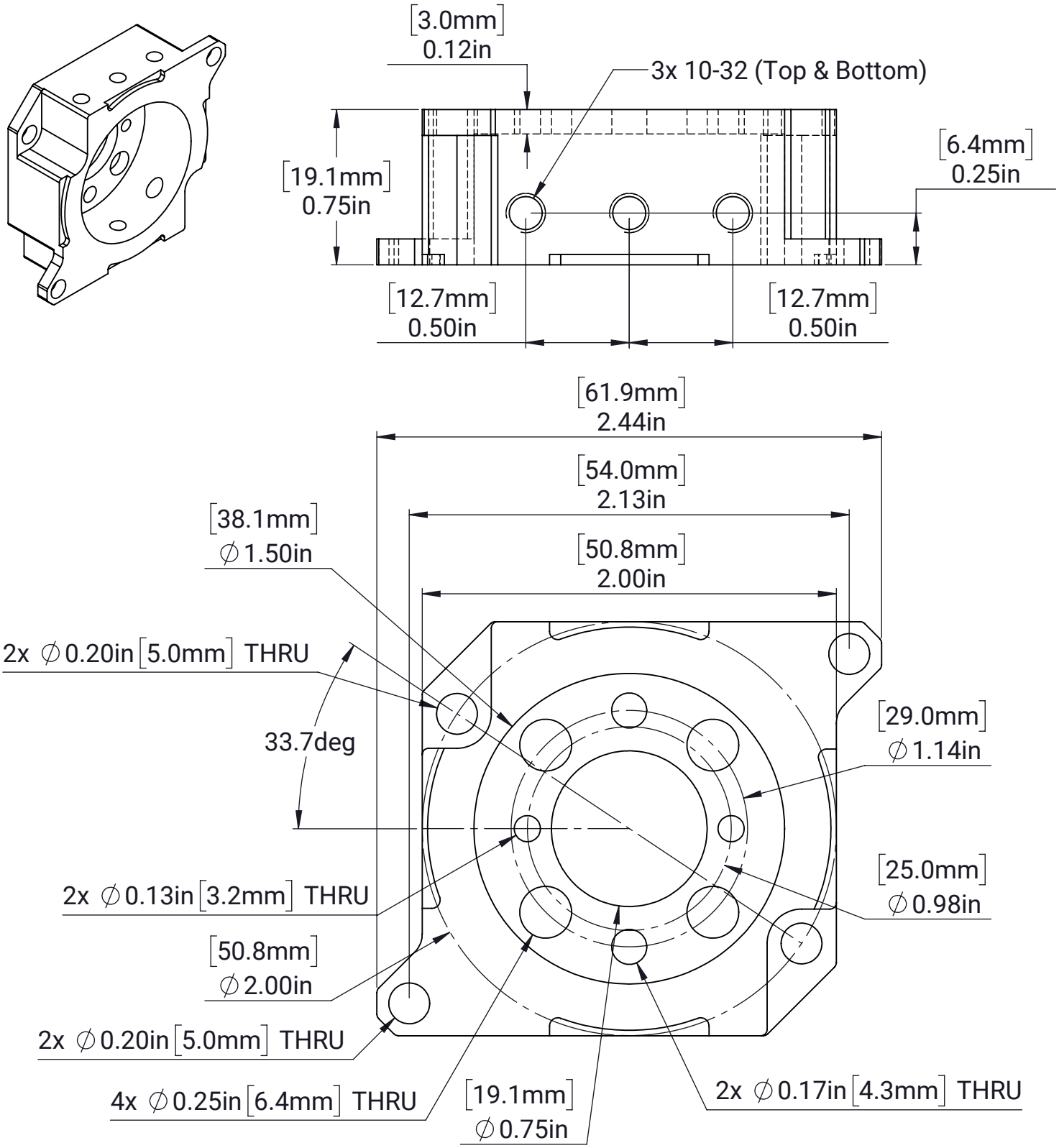

MATERIAL:	FINISH:	DATE:
Aluminum	Black Anodized	12/9/2021

Copyright © 2021 REV Robotics, LLC